CTJ420E109

| REVISIONS | | | |
|---|---|---|---|
| SYM | DESCRIPTION | DATE | APPROVED |
| N/C | NEW RELEASE PER E.O. 96081 | 2/23/83 | J. H. |

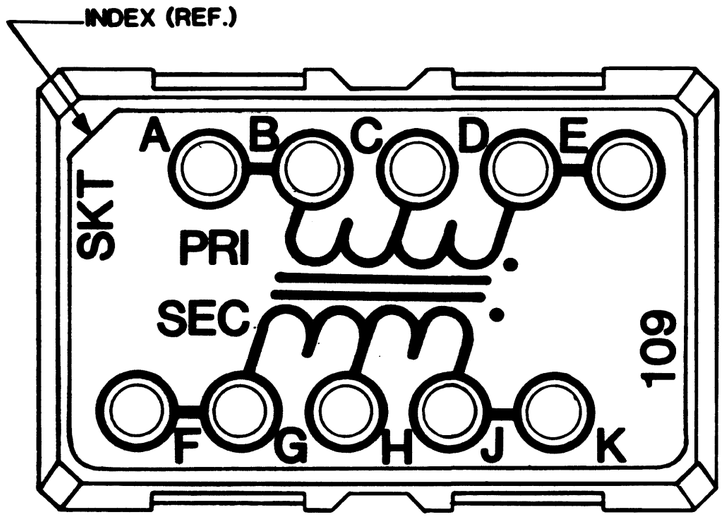


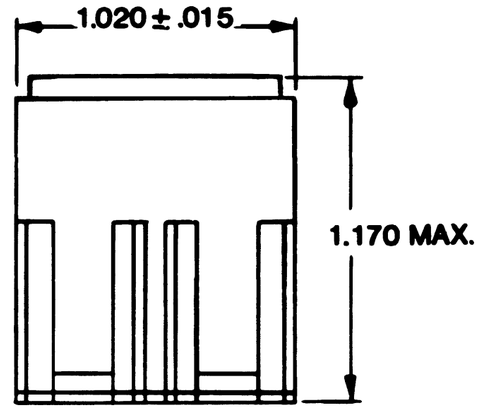


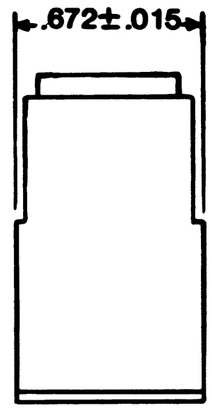


11. COMPONENT: .1 M27/172-45 TRANSFORMER CONFORMING TO MIL-T-27/172.
10. THIS ASSEMBLY CONFORMS TO AFLC 8027520-4 SPEC.
9. SOCKET CONTACTS MEET MIL-C-39029/22-192 REQUIREMENTS.
8. JUNCTION ELECTRONIC COMPONENT TEMPERATURE RANGE : -67°F TO 392°F ( -55°C TO 200°C ).
7. MATERIALS AND FINISHES :

   HOUSINGS - THERMO PLASTIC.

   GROMMET - SILICONE ELASTOMER.

   PIN CONTACTS - COPPER ALLOY PLATED GOLD.
6. CONTACT TOOL NO. M15570-20 IS REQUIRED.
5. SEE ENVELOPE DRAWING NO. CTJ-3#### FOR SUITABLE RAIL ASSEMBLIES.
4. FOR CONTACT DATA SEE ENVLOPE DRAWING 1625-1-0000.
3. CTJ420E ——— - XXX
   - MODIFICATION
   - CIRCUIT ARRANGEMENT
   - BASIC IDENTIFIER
2. THE CIRCUIT IDENTIFICATION WILL BE SCREENED ON JUNCTION.

NOTE : 1. DIMENSIONS ARE IN INCHES UNLESS OTHERWISE SPECIFIED.

| | SIGNATURE & DATE |
|---|---|
| DR | Gene Whatley 2/23/83 |
| CHK | Jim Holt 2/25/83 |
| PE | MacDonald 2-25 |
| | |
| APPD | |
| SCALE NONE | WT —— |

JUNCTION ASSEMBLY
ELECTRONIC COMPONENT
SIZE 12
SIZE 20 CONTACTS
109 ARRANGEMENT
ENVELOPE

CP | MATL CODE 16

The Deutsch Company
ELECTRONIC COMPONENTS DIVISION
Municipal Airport
Banning, California

B | CTJ420E109

DWG SIZE | CODE 11130 | SHEET 1 OF 1